Company Model	Drawing	No.	Spare part	Quantity	Material	size	L	H	DN	PN	WEIGHT
S5095	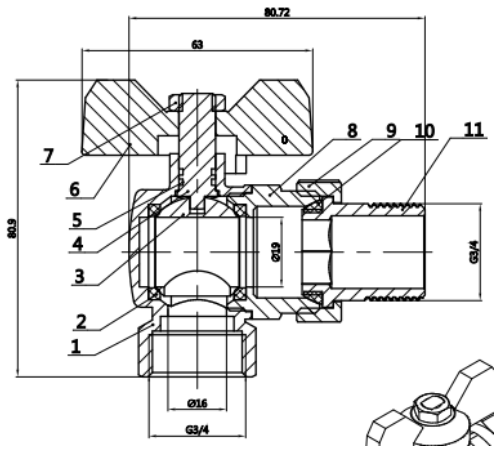	1	body	1	brass	3/4	80.72	80.9	19	25	415
		2	seat	2	PTFE	1	93.5	93.1	25	25	625
		3	ball	1	brass						
		4	stem	1	brass						
		5	O-ring	2	NBR						
		6	handle	1	aluminium						
		7	nut	1	steel						
		8	bonnet	1	brass						
		9	Lock cap	1	brass						
		10	gasket	1	EPDM	thread according to ISO228					
		11	union	1	brass	Working Temperature: -20˚C≤t≤+110°C					